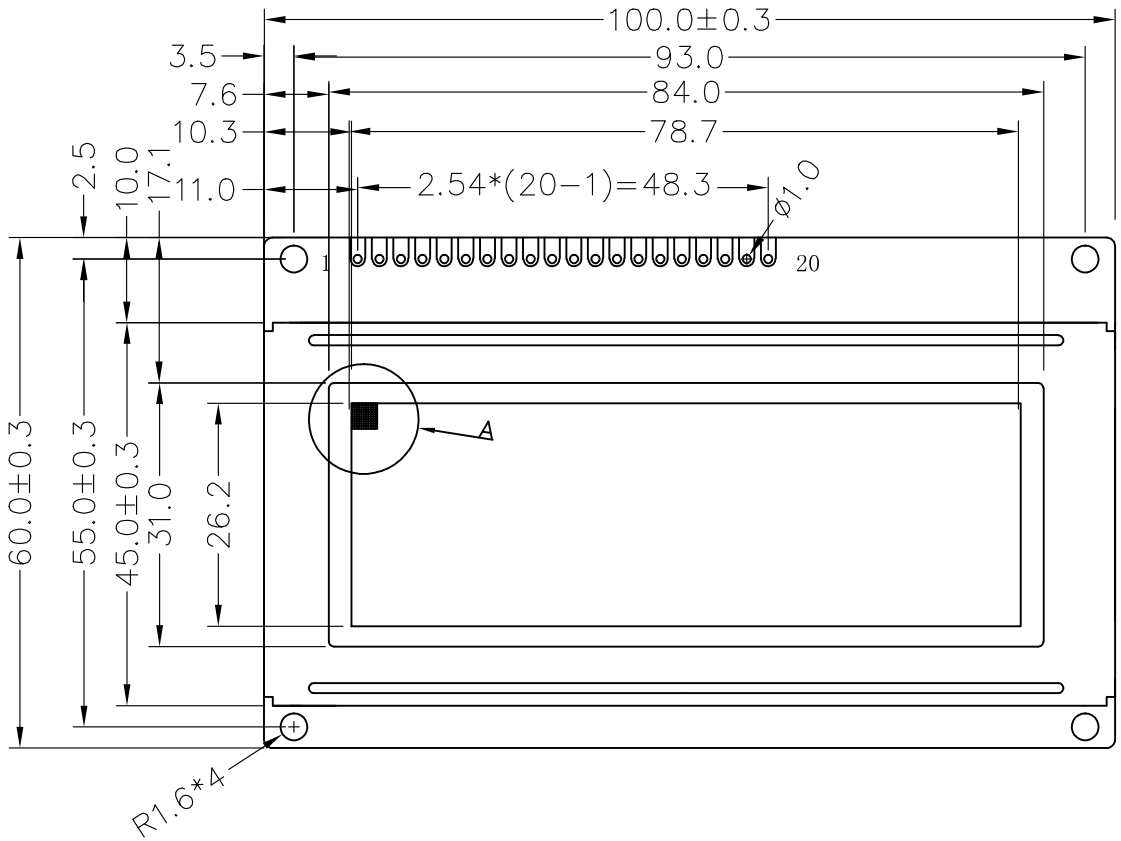

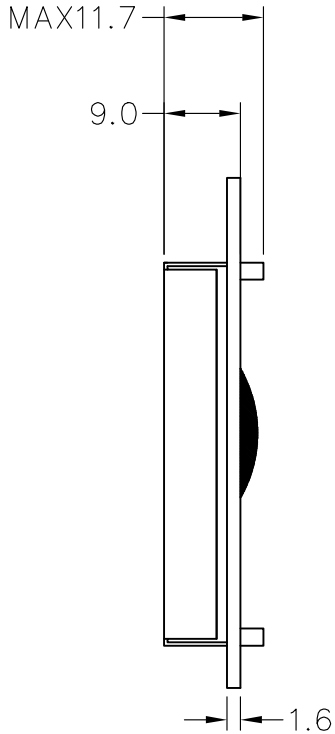

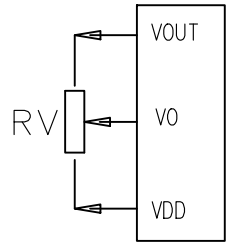

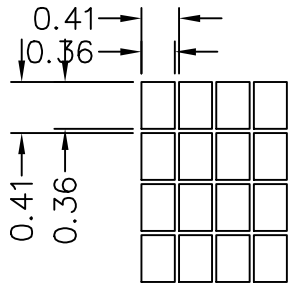

SPECIFICATION:

1). Driving: Duty:1/64, Bias:1/9, Vdd:5.0V, Vlcd:7.5V

2). VIEWING DIRECTION: 6 O'CLOCK

3). Display mode: STN/Negative/Transmissive/Y-G

4). Operating temp.:−20°C~+70°C

5). Storage temp.: −30°C~+80°C

6). Control IC: SNB6400G,SNB0064

7). BACKLIGHT: Y-G

8). DIMENSIONS WITH MARK "*" ARE IMPORTANT
WITH MARK "()" ARE REFERENCED

9). All the raw materials are RoHS compliant

1	2	3	4	5	6	7	8	9	10
DB7	DB6	DB5	DB4	DB3	DB2	DB1	DB0	E	R/W
11	12	13	14	15	16	17	18	19	20
RS	VO	VDD	VSS	CS2	CS1	VOUT	RST	BLA	BLK

REV	REVISION RECORD	DATE	TCC® 深圳市三元晶科技有限公司 ShenZhen TCC LCD Hi-Tech Co., Ltd.				
A							
B			MODEL NO.	SYB19264AV10-5C9YL1N3R-B5NG		GENERAL TOL: ± 0.2	
C			APPROVED BY	CHECKED BY	DRAWING BY	PAGE: 1 OF 1	UNIT: mm
D					Luoxian 2011/02/16	PROJECTION	